NOTES ON VERSIONS:
1) Early units have the HV switch on the RF deck in the position where the QSK/SSB switch is on later units, and there is no QSK switch. With those older units, the SSB keying loop MUST be opened in QSK mode (if it isn't, you'll lock in XMIT with your first dit).
2) Schematics for an early version do not show a 2-speed fan.
3) Later units have insulation between plates of the output (LOAD) capacitors.
4) Older units use 12V meter lamps in series, with one lampholder insulated by a fiber washer. Newer units use 28V meter lamps in parallel. Both are driven from the 28V bus.
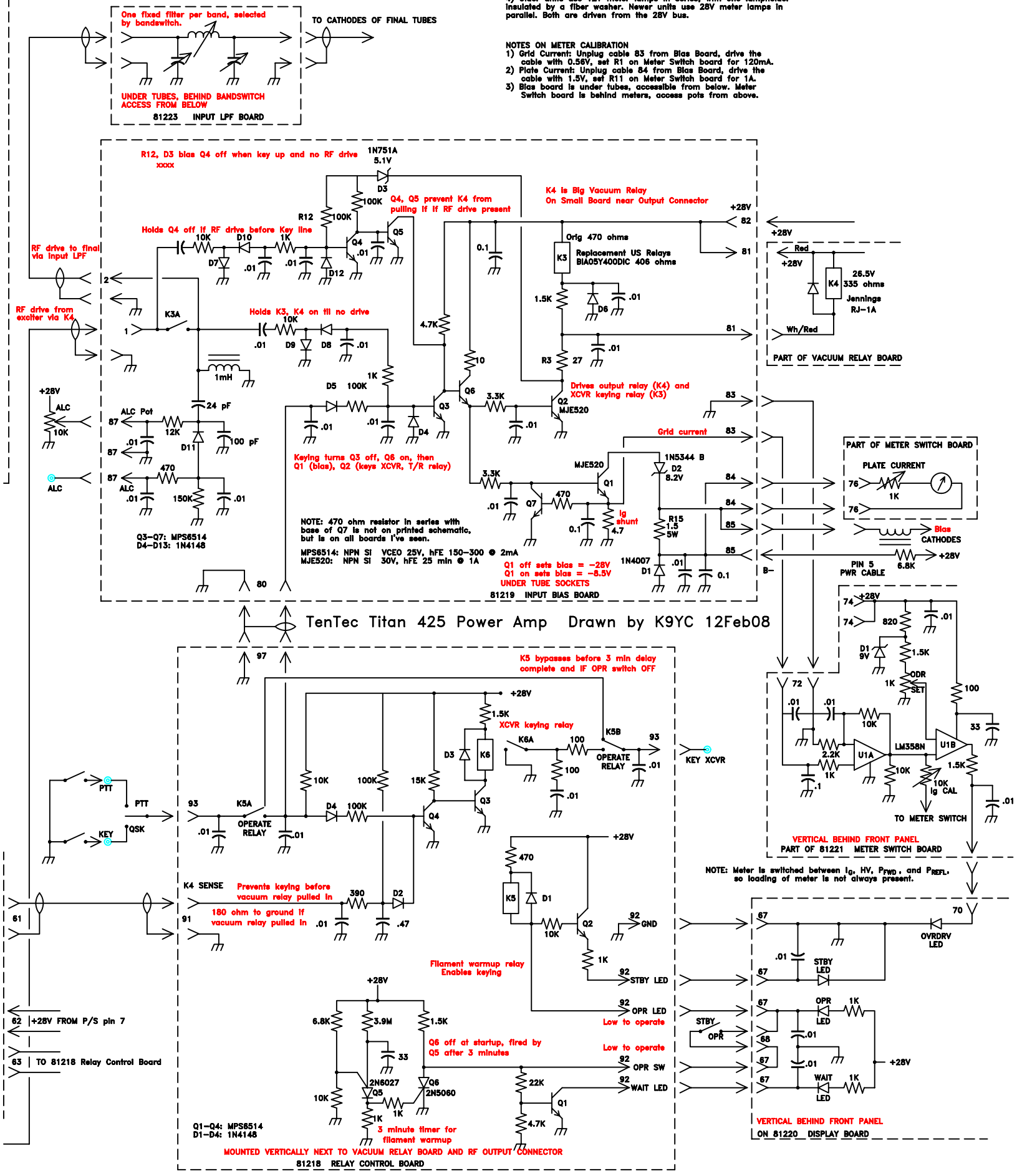
NOTES ON METER CALIBRATION
1) Grid Current: Unplug cable 83 from Bias Board, drive the cable with 0.56V, set R1 on Meter Switch board for 120mA.
2) Plate Current: Unplug cable 84 from Bias Board, drive the cable with 1.5V, set R11 on Meter Switch board for 1A.
3) Bias board is under tubes, accessible from below. Meter Switch board is behind meters, access pots from above.